COPYRIGHT 2000 FALCON LOCK

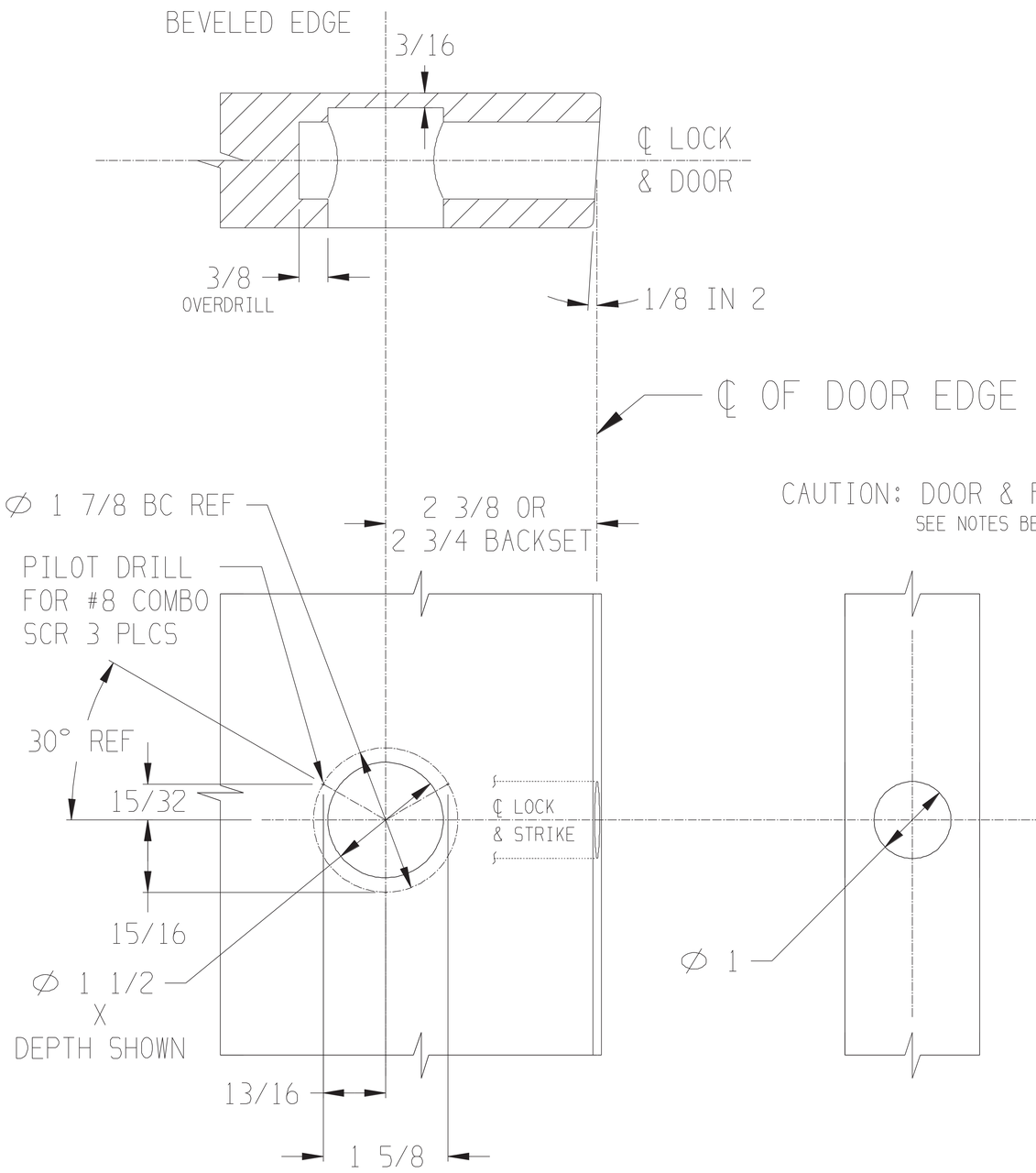

INSIDE DOOR PREP

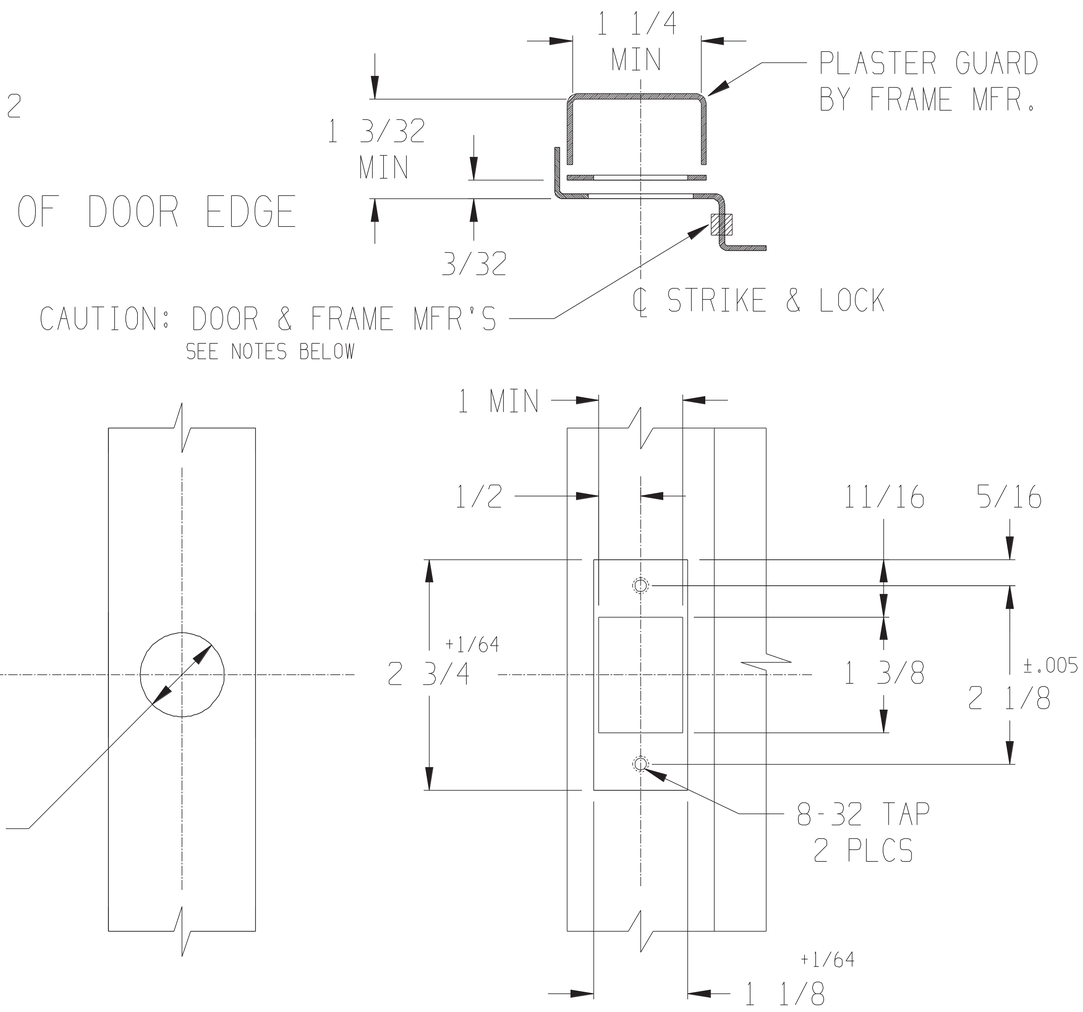

STANDARD FRAME PREP

ALL DIMENSIONS IN INCHES DOOR THICKNESS 1 3/8-1 3/4

NOTE: IF SMOKE SEAL, WEATHERSTRIPPING, ACOUSTICAL MATERIAL OR SILENCERS ARE USED ON THE DOOR OR FRAME, CARE MUST BE TAKEN IN THE INSTALLATION SO THAT THEY WILL NOT INTERFERE WITH THE EASE IN WHICH THE LATCH BOLT ENTERS THE STRIKE.

RESPONSIBILITY DOOR & FRAME MANUFACTURERS ARE RESPONSIBLE FOR PROVIDING ADEQUATE CONSTRUCTION REINFORCEMENTS FOR PROPER INSTALLATION OF HARDWARE SHOWN. ALL ARCHITECTURAL BUILDERS HARDWARE MUST BE INSTALLED ON PROPERLY REINFORCED DOORS & FRAMES, REGARDLESS OF THE TYPE, MATERIAL, OR METHOD OF CONSTRUCTION.

FALCON LOCK	SUPERSEDES TEMPLATE No. 35177W
TITLE D861 SERIES DEADBOLT, WOOD DOOR, CIRCULAR FLAT FACEPLATE, DRIVE-IN BOLT	
DATE 7-24-97 / DO NOT SCALE DWG	TEMPLATE NO. T1015-0